LTR	DATE	REVISION	CHK	APD
B	8/25/97	07637 - REINSTATED RFR		
C	06/29/04	83852D-CHG TOLERANCE TO ONE & TWO PLACE PJM		

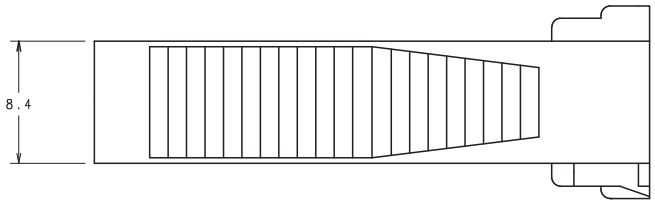

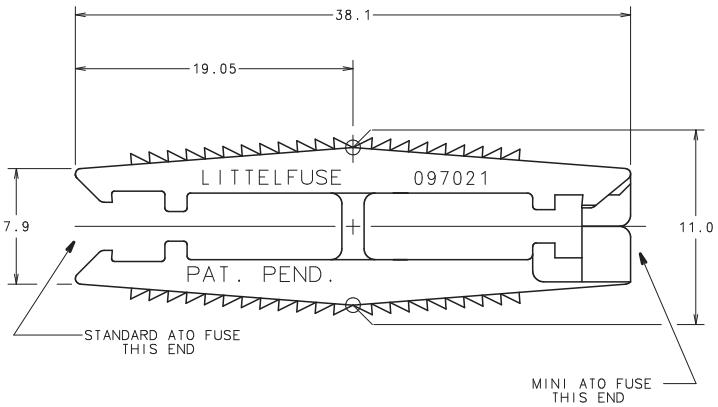

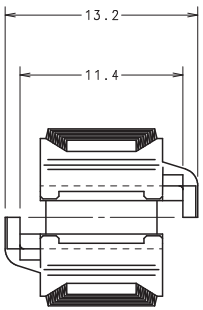

METRIC
UNLESS OTHERWISE SPECIFIED
ALL DIMENSIONS ARE MILLIMETERS

UNLESS OTHERWISE SPECIFIED, DIMENSIONS DO NOT INCLUDE PLATING.	
O	DENOTES CRITICAL CHARACTERISTICS.
CPK	DENOTES CPK DIMENSIONS,-MINIMUM CPK VALUE
ST	DENOTES A CHARACTERISTIC THAT PROVIDES AN INDICATION OF PROCESS PERFORMANCE. PROCEDURE FOR MEASUREMENT AND TRACKING TO BE DEFINED IN LITTELFUSE INSPECTION INSTRUCTIONS.
CP	DENOTES CP DIMENSIONS,-MINIMUM CP VALUE MUST BE WITHIN THE DIMENSIONAL LIMITATIONS SHOWN ON DRAWING AND INITIALLY LOCATED TO ALLOW FOR MAXIMUM TOOL LIFE.

COPIES TO			
1 9 18	MATL SPEC	THERMO PLASTIC COLOR - WHITE	
2 10 19	FINISH		
3 12 20			
4 13 21	DRW RFR	DATE 8/25/97	SCALE 4:1
5 14 23	CHK	DATE	SUPER DR
6 15 33			
7 16 43	APPD	DATE	RAW STK WT
8 17 53			LBS/M

TOLERANCE UNLESS OTHERWISE SPECIFIED
ONE PLACE DEC ±.15 FRACTION ±
TWO PLACE DEC ±.25 ANGULAR ±1°

TITLE FUSE INSERTER AND EXTRACTOR (STD. & MINI ATO FUSES)

Littelfuse® DES PLAINES, ILLINOIS 60016 | REVISION C | DRWG. NO. OUTLINE 00970021N

UNCONTROLLED DOCUMENT

UNCONTROLLED WHEN ON - WARNING WATERMARK