Data Sheet

xtremeDB

xDB-1-SIM

Passive Module

Molded Plastic

8-32 Vdc

United States Patent: US 10,069,226 Sep. 4, 2018

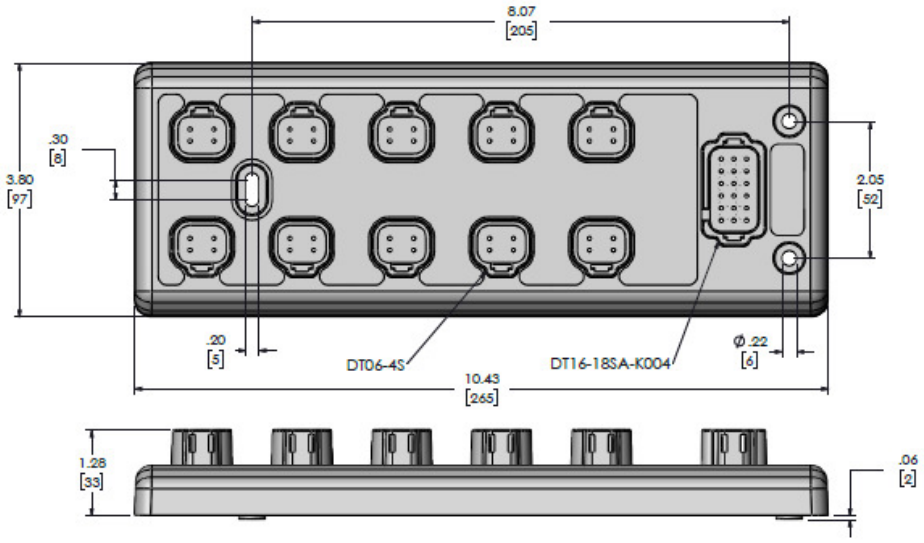

Technical Data	
Housing	*Molded glass filled nylon*
Dimensions (l x w x h)	*3.80 x 10.43 x 1.34 in (97 x 265 x 34 mm)*
Weight	*1.5 lbs (0.68 kg)*
Installation (mounting hardware not included)	*Screw: 3 x #10 (3 x M5)* *Torque: 21 in-lbs (2.4 Nm) max.*
Mating Connectors and Accessories *Operating Voltage, Ground, and Configuration* *I/O-Ports* *DEUTSCH size 16 Socket* *DEUTSCH Seal Plug*	 *18 Pole Plug DT16-18SA or equivalent* *4 Pole Plug 10 x DT06-4S or equivalent* *0462-201-16141 (16 – 20 AWG)* *1062-16-0122 (14 – 18 AWG)* *114017*
Total I/Os	*16 (2 mirrored ports: ports 7 & 9 and ports 8 & 10)*
Operating Voltage (BATTERY)	*8…32 V DC*
Current (BATTERY, GROUND)	*13 A per pin max.*
Current (IO)	*8 A per pin max.*
Total Node Current	*52 A max.*
Operating Temperature	*-40…80 °C*
Storage Temperature	*-40…85 °C*
Protection Class	*IP67: Connector seal plugs required for unused pins. Sealing plugs required for unused ports* *IP68/IP69K: Using MDC xtreme cables.*

≤2000m

					Date	Name
f	DCN F645	05.05.21	FSa	Originator	02.09.17	JNa
e	DCN F412	10.02.20	TMc	Approved	02.10.17	KGu
d	DCN F256	05.18.20	FSa			
c	DCN F112	12.02.19	FSa			
Rev.	Description	Date	Name			
b	Initial release	02.10.17	JNa			

DATA PANEL
A Murrelektronik Company

Data Sheet

xtremeDB Passive Module
xDB-1-SIM

The trademark DEUTSCH is owned by the TE Connectivity Ltd. family of companies.

Operating States (LEDs)	Color	Status
I/O	Yellow	Left LED – I/O-A Right LED – I/O-B

Test Standards and Regulation	
Climatic Tests	Cold Temperature to IEC 60068-2-1:2007, test Ad Dry Heat to IEC 60068-2-2:2007, test Bb Temperature Durability to IEC 60068-2-14:2000-08, test Nb Temperature Shock to IEC 60068-2-14:2000-08, test Na Humidity Soak to IEC 60068-2-78:2001, test Cab Humidity Cycle to IEC 60068-2-30:2005, test Db
Mechanical Tests	Swept Sine Vibration to IEC 60068-2-6:2007, test Fc Random Vibration to IEC 60068-2-64:2008, test Fh Resonance Vibration to IEC 60068-2-6:2007, Section 8.1 Mechanical Shock to EN 60068-2-27:2008, test Ea Mechanical Bump to EN 60068-2-27:2008, test Ec IP protection to EN 60529:2000-09, test IP67, IP68, IP69K Chemical Loads to ISO 16750-5:2010 Part 5: AA, BA, BC, BD, BE, CC, DB, DD
CE	RoHS: Directive 2011/65/EU

Derating Curve

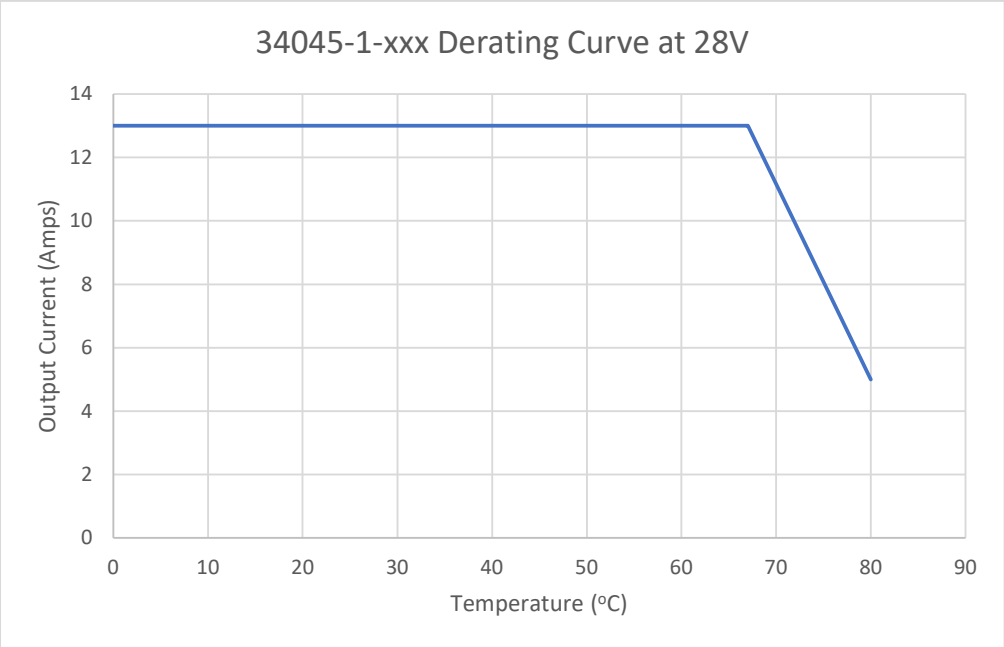

					Date	Name
f	DCN F645	05.05.21	FSa	Originator	02.09.17	JNa
e	DCN F412	10.02.20	TMc	Approved	02.10.17	KGu
d	DCN F256	05.18.20	FSa			
c	DCN F112	12.02.19	FSa			
Rev.	Description	Date	Name			
b	Initial release	02.10.17	JNa			

DATA PANEL
A Murrelektronik Company

Data Sheet

xtremeDB Passive Module
xDB-1-SIM

The trademark DEUTSCH is owned by the TE Connectivity Ltd. family of companies.

Connector Interface

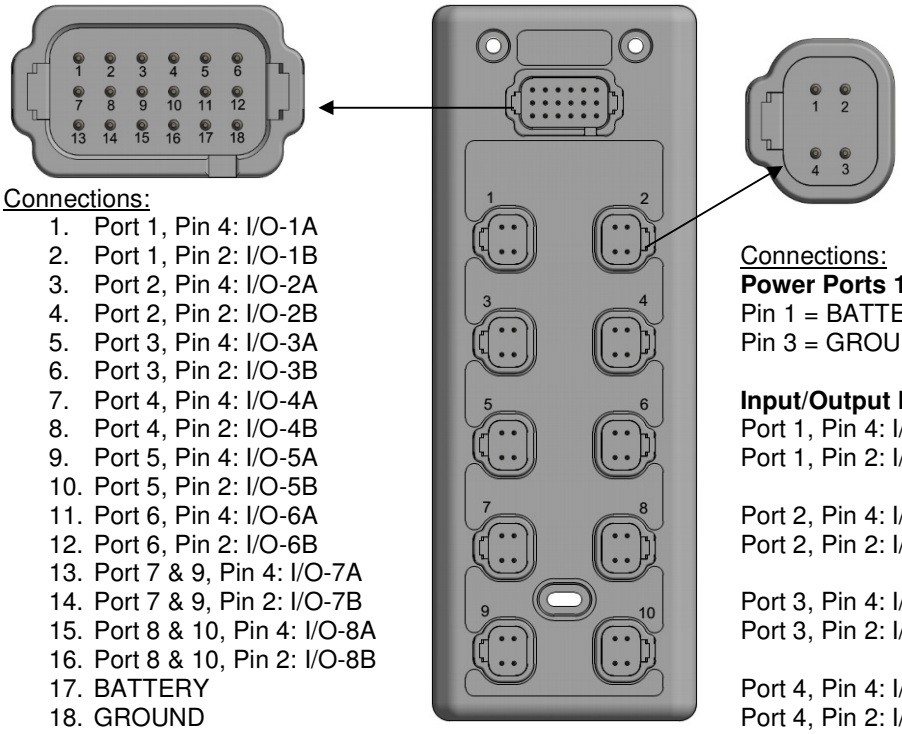

Connections:

1. Port 1, Pin 4: I/O-1A
2. Port 1, Pin 2: I/O-1B
3. Port 2, Pin 4: I/O-2A
4. Port 2, Pin 2: I/O-2B
5. Port 3, Pin 4: I/O-3A
6. Port 3, Pin 2: I/O-3B
7. Port 4, Pin 4: I/O-4A
8. Port 4, Pin 2: I/O-4B
9. Port 5, Pin 4: I/O-5A
10. Port 5, Pin 2: I/O-5B
11. Port 6, Pin 4: I/O-6A
12. Port 6, Pin 2: I/O-6B
13. Port 7 & 9, Pin 4: I/O-7A
14. Port 7 & 9, Pin 2: I/O-7B
15. Port 8 & 10, Pin 4: I/O-8A
16. Port 8 & 10, Pin 2: I/O-8B
17. BATTERY
18. GROUND

Connections:

Power Ports 1 to 10
Pin 1 = BATTERY
Pin 3 = GROUND

Input/Output Ports 1 to 10
Port 1, Pin 4: I/O-1A
Port 1, Pin 2: I/O-1B

Port 2, Pin 4: I/O-2A
Port 2, Pin 2: I/O-2B

Port 3, Pin 4: I/O-3A
Port 3, Pin 2: I/O-3B

Port 4, Pin 4: I/O-4A
Port 4, Pin 2: I/O-4B

Port 5, Pin 4: I/O-5A
Port 5, Pin 2: I/O-5B

Port 6, Pin 4: I/O-6A
Port 6, Pin 2: I/O-6B

Port 7 & 9, Pin 4: I/O-7A
Port 7 & 9, Pin 2: I/O-7B

Port 8 & 10, Pin 4: I/O-8A
Port 8 & 10, Pin 2: I/O-8B

The trademark DEUTSCH is owned by the TE Connectivity Ltd. family of companies.

Connector Wire Diagram

34045-1-000 I/O Diagram

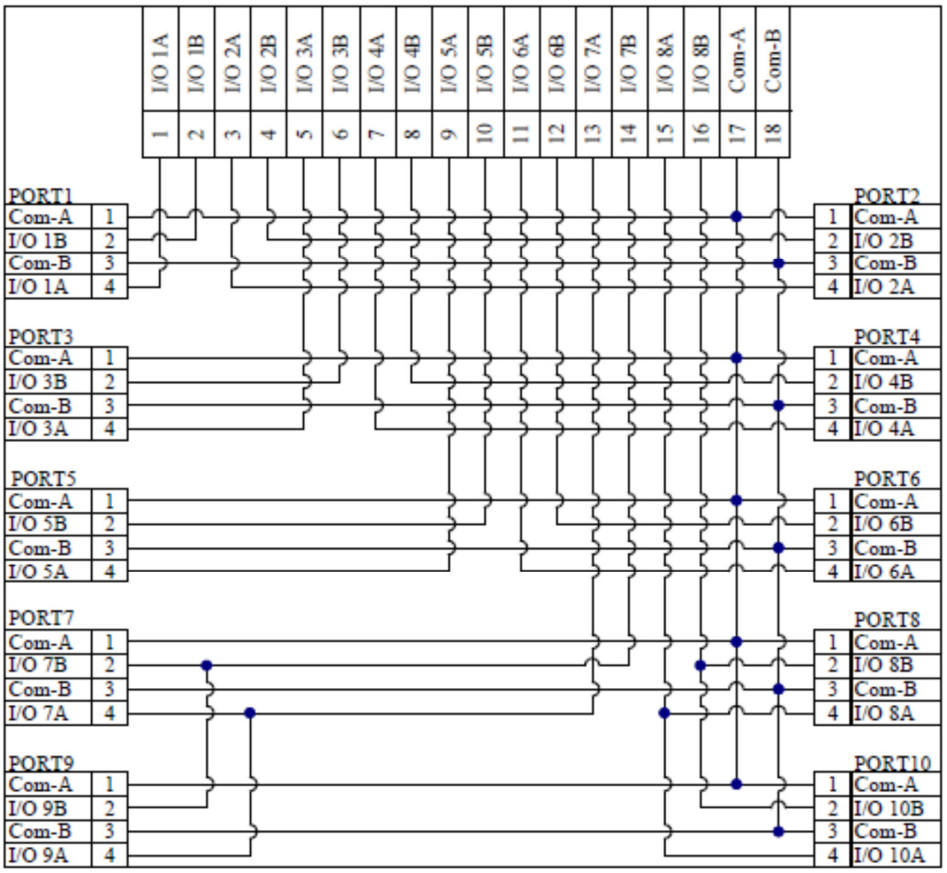

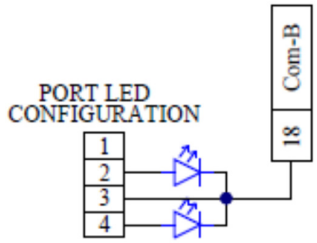

					Date	Name
f	DCN F645	05.05.21	FSa	Originator	02.09.17	JNa
e	DCN F412	10.02.20	TMc	Approved	02.10.17	KGu
d	DCN F256	05.18.20	FSa			
c	DCN F112	12.02.19	FSa			
Rev.	Description	Date	Name			
b	Initial release	02.10.17	JNa			

DATA PANEL
A Murrelektronik Company

Data Sheet

xtremeDB Passive Module
xDB-1-SIM

Sheet
4 of 4

The trademark DEUTSCH is owned by the TE Connectivity Ltd. family of companies.