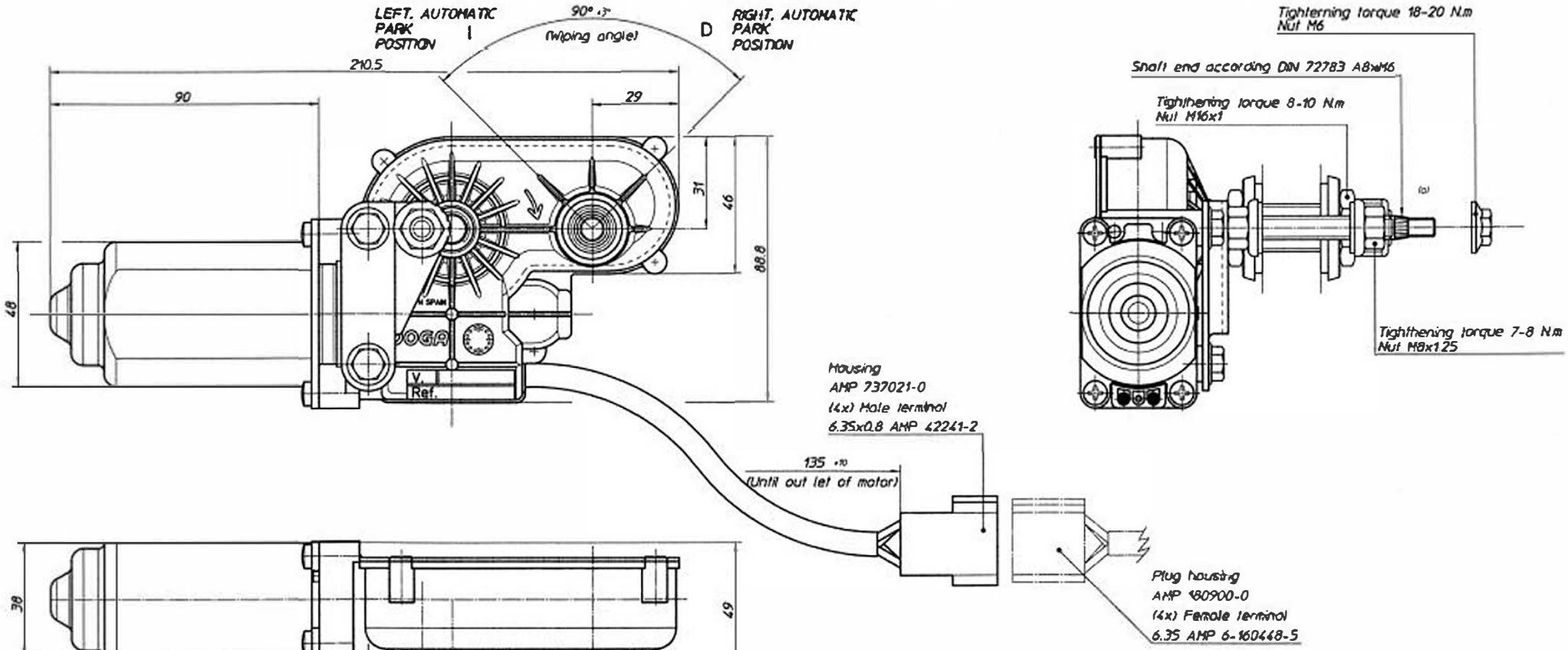

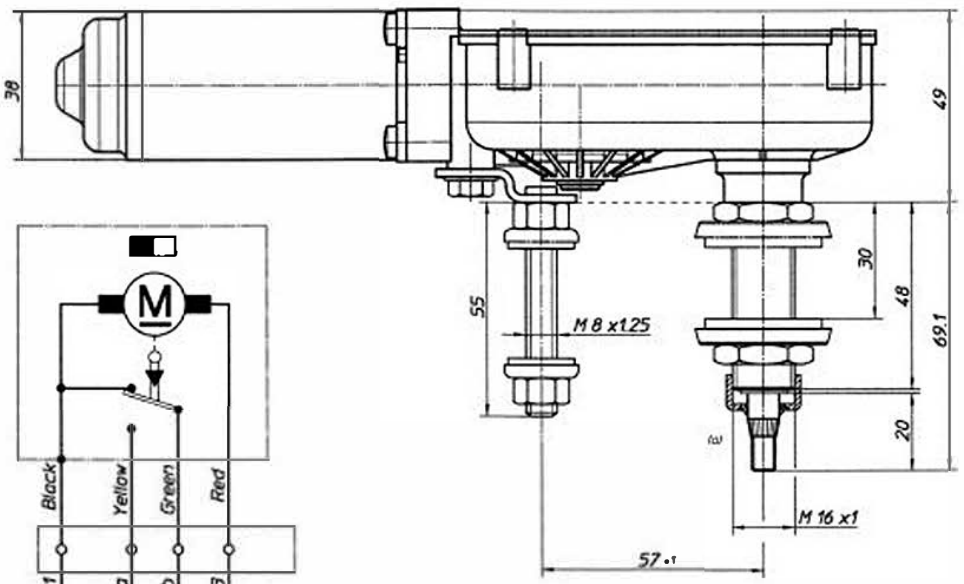

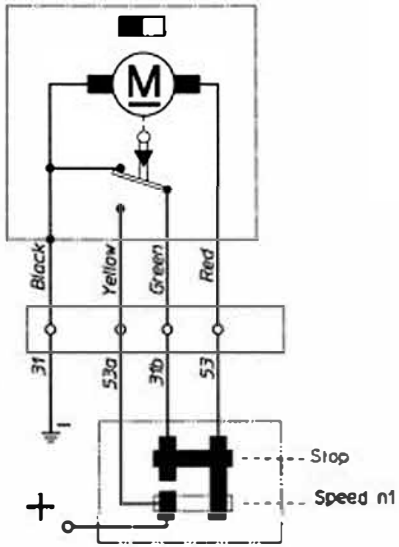

WIRING DIAGRAM

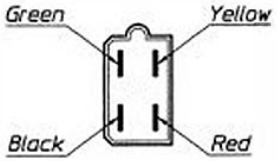

CONNECTOR
(Front view)

MOTOR PERFORMACE TYPE 316					
NO LOAD PERFORMANCE				Starting torque	Testing voltage
Speed	V	Current	r.p.m.		
n1	12	≤ 1.6 A	44 ±3	≥ 10 Nm	13 V
n2		≤ 2.2 A	65 ±5		
n1	24	≤ 0.9 A	44 ±3		26 V
n2		≤ 1.1 A	65 ±5		

TERMINAL (DIN 72552)	COLOUR	ELECTRICAL WIPER FUNCTION
53	Red	Positive Speed 1°feed switch
31	Black	Negative, earth.
31b	Green	Park feed.
53a	Yellow	Park (auxiliar feed).

MOTOR P/N	V	PARK POSITION	
		"I" LEFT	
		"D" RIGHT	

FIXATION ACCESORIES BAG	
Drive pivot group	Screw
100.5041.09.00	100.5010.09.00

a	Shaft end M6 it was M8 05-09-07 JF	
		MODIFICACIONES

H.P. MEIO CAD DRAWN

DIBUJADO	03-03-06	
COMPROBADO	5.9.7	
ESCALA	1:1	
DESIGNACION	WINDSHIELD WIPER MOTOR TYPE 316	
CLIENTE	REFERENCIA	VEHICULO

DOGA
ABRERA - BARCELONA ESPAÑA
Nº 52160
a

O

PC