SALES

Level	Zone	ECI Nº.	Revision note	Date	Designed	Checked
R02	02	7879	Richtigstellung der Homologation Correction of the Homologation	2019/07/22	Kloster. M.	Rinner J.

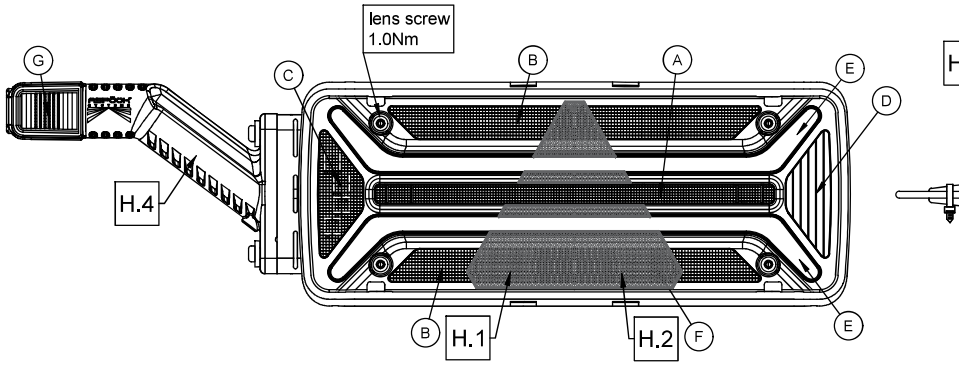

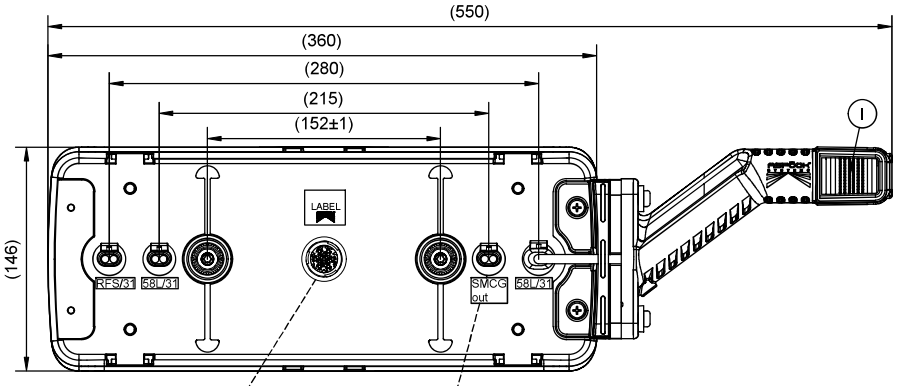

DIN 72585	
FUNCTION	PIN
Masse *GND*	1
Rücklicht LH *Tail LH*	2
Rückfahrl. *Reverse*	3
Blinker LH *DI LH*	4
Bremse *Stop*	5
Nebelschl. *Fog*	6
-	7

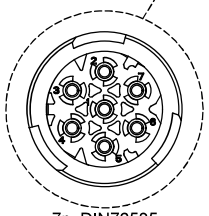

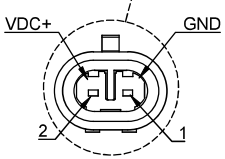

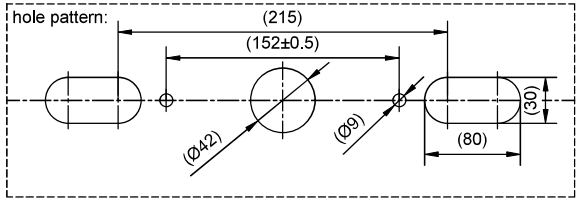

Electrical Specification				
Funktion *Function*	Nennspannung *Nominal Voltage*	Spannungungsbereich *Voltage Range*	Nennstrom *Nominal Current*	Nennleistung *Nominal Power*
Volt (V)	Volt (V)	Volt (V)	Ampere (A)	Watt (W)
Progressiv DI	12V / 24V	10V - 30V	0.28A / 0.29A	3.3W / 7W
Stop	12V / 24V	10V - 30V	0.28A / 0.17A	3.3W / 4W
Reverse	12V / 24V	10V - 30V	0.18A / 0.11A	2.1 / 2.6W
Fog	12V / 24V	10V - 30V	0.21A / 0.13A	2.5W / 3.1W
Tail	12V / 24V	10V - 30V	0.27A / 0.17A	3.2W / 4W
End outline marker	12V / 24V	10V - 30V	0.13A / 0.13A	1.5W / 3W

02

Homologation description							
H.1	E9 22480	IIIA 02	2a 01	R1 02	S1 02	AR 00	F1 00
H.2	E9 16286	10R 05					
H.3	E9 6878	SM1 00	A 02	R1 02			
H.4	E9 6765	10R 05					

FUNCTION:	
Rücklicht. LH *Tail LH*	I
SMCG Ausgang (Rückl. LH) *SMCG out (Tail LH)*	II
Rücklicht. LH *Tail LH*	III
Rückfahrl. *Reverse*	IV

FUNCTION:	
Laufblinker LH LED *Progressive DI LH LED*	A
Bremse LED *Stop LED*	B
Nebelschl. LED *Fog LED*	C
Rückfahrl. LED *Reverse LED*	D
Rücklicht LED *Tail LED*	E
Reflektierendes Dreieck *Reflex reflector triangle*	F
Positionslicht rot (Umrissarm) *Position light red (rubber arm)*	G
Seitenmarkierung rot (Umrissarm) *Side marker red (rubber arm)*	H
Positionslicht weiss (Umrissarm) *Position light white (rubber arm)*	I

Asp. Norm AAW075.04 ( ) Auxiliary dimension DIN 406-10 Theoretical dimension ISO 1101
Test dimension (SPC) [ ] Unfinished dimension DIN 406-10 Surface quality ISO 1302

Designed by	Checked by	Approved by	
Klostermann Marcel 2018/09/25	Strubreiter Daniel 2018/10/08	Enzlmüller Manuel 2018/10/09	ASPÖCK MDM APPROVED

25-4121-057

Part Number

Dimensions in mm

Designation
Ecoled II-LH AMP 7pin/4xSS 2p./EOM/SMCG

Project number 1165

Drawing Nr. 25412105

Business Unit SALES - 24

Tolerance -

Weight 1480 g

Scale x:x

Level R02

Sheet 1 / 1

Transmittal, reproduction, dissemination and/or editing of this document as well as utilization of its contents and communication there of to others without express authorization are prohibited. Offenders will be held liable for payment of damages. All rights created by patent grant or registration of a utility model or design patent are reserved.

ADR-Zone 2 geprüft

IP54

A3 - AutoCAD 2017 QW171.206 / AAW075.02