SPECIAL CHARACTERISTICS				
No.	AREA	VALUE	UP TO MTA	UP TO CUSTOMER
01	-	-	-	-

REVISION HISTORY			
REV.	DESCRIPTION	NAME	DATE
0	FIRST ISSUE	R.BUSSACCHINI	10.10.11
1	REMOVED SYMBOL (-) AT COMPONENT POS. 2 LEVER	E.GOTTSFRITZ	19.04.21

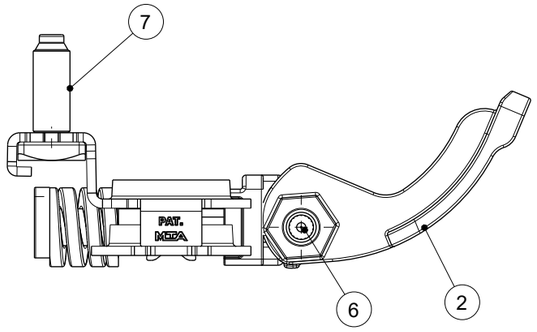

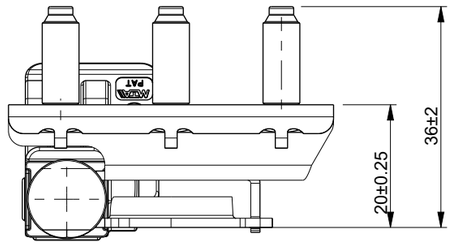

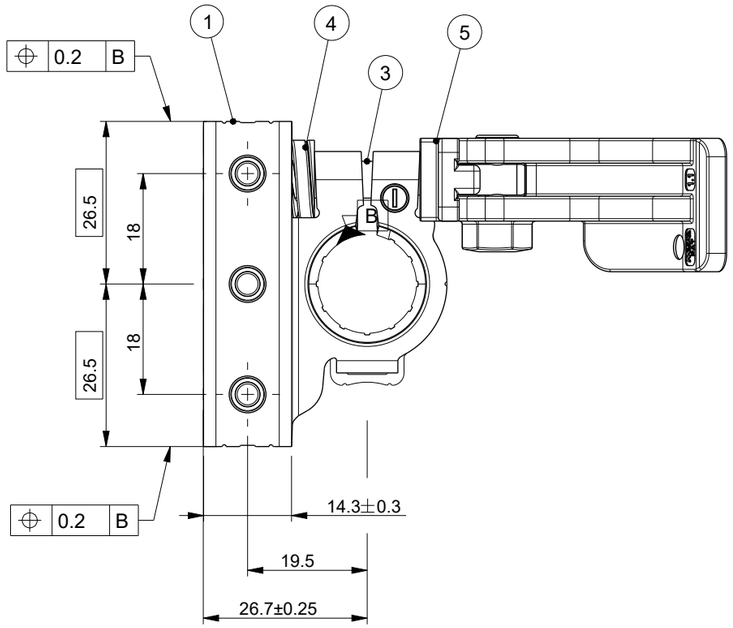

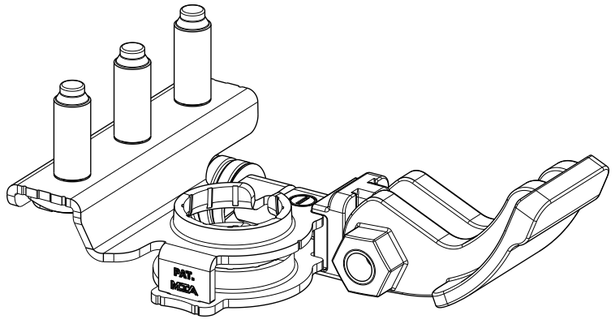

PERSPECTIVE VIEW
SCALE 1:1

OPENING/CLOSING LEVER OVERALL RAY

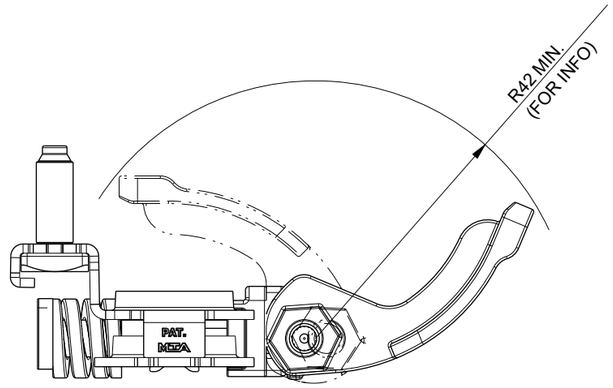

SCALE 1:1

POS.	Q.TY	DENOMINATION	MATERIAL
7	3	SCREW M6	STEEL CL. 8.8(ISO 898) Fe/Zn 7 (ISO 4042)
6	1	PIN	STEEL CL. 8.8(ISO 898) Fe/Zn 7 (ISO 4042)
5	1	SQUARE WASHER	PBT-GF40 (ISO 1043) COLOR GREY
4	1	SPRING	54SiCr6(DIN 17223) Delta Seal Delta Tone
3	1	PIVOT	STEEL CL. 8.8(ISO 898) Fe/Zn 7 (ISO 4042)
2	1	LEVER	PBT-GF40 (ISO 1043) COLOR GREY
1	1	TERMINAL	CuZn33 (ISO 1190-1) Tin Plated BLANK REEL THICKNESS $1.5^{0}_{-0.05}$

BEST DIMENSION OF BATTERY TERMINAL POSITIONING ON BATTERY POLE (IEC NORM 60095-2)

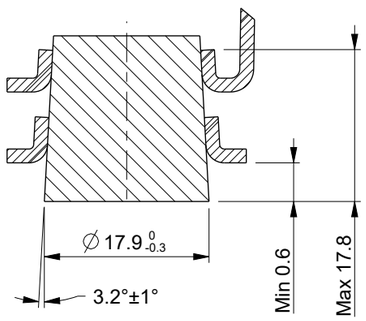

SCALE 3:2

(TAPER 1:9)

NOTE

THE MINIMUM FORCE TO INSTALL THE BATTERY TERMINAL IN THE OPERATION RANGE IS 80N

OPERATING FEATURES

FEATURE	UNIT	VALUE
T.MIN - T.MAX	°C	-40 / +120
FLAMABILITY	UL 94	HB
SCREW TORQUE M6(Pos.7)	Nm	5.5 ±20%

MTA	MTA P/N	1507601/1x		Denom.	BATTERY TERM. VQR M666(-)
	Draw No.	B0-249.121B		Used for	NEGATIVE BATTERY POLE
Draft date	10.10.11	Draw for	CUSTOMER	Material	SEE TAB.
Issued by	R.BUSSACCHINI	Scale / CAD MODEL Weight(g) / Lin.Tol.± / Ang.Tol.±		Coating	SEE TAB.
Verified by	F.COELHO	1:1	65 / 0.5 / 2º	Colour	SEE TAB.
PQ Approval	A.BIFFI	A3	Dimensions in (mm) / Sheet 1/1	Status	RELEASED 21/04/2021
TD Approval	M.ROSSI	CAD Software PTC Creo			

REV. 1 — PAPER COPY ONLY FOR REFERENCE
CHECK LAST REVISION RELEASE ON ELECTRONIC VERSION

All proprietary rights reserved by MTA S.p.A. - This drawing shall not be reproduced, or in any way utilized, for the manufacture of the component or unit herein illustrated and must not be released to other parties, without written consent.
Any infringement will be legally pursued.