Nr/No	Ändring/Change	Datum/Date	Godk av/Approved By

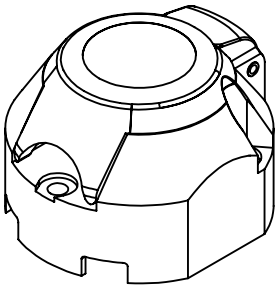

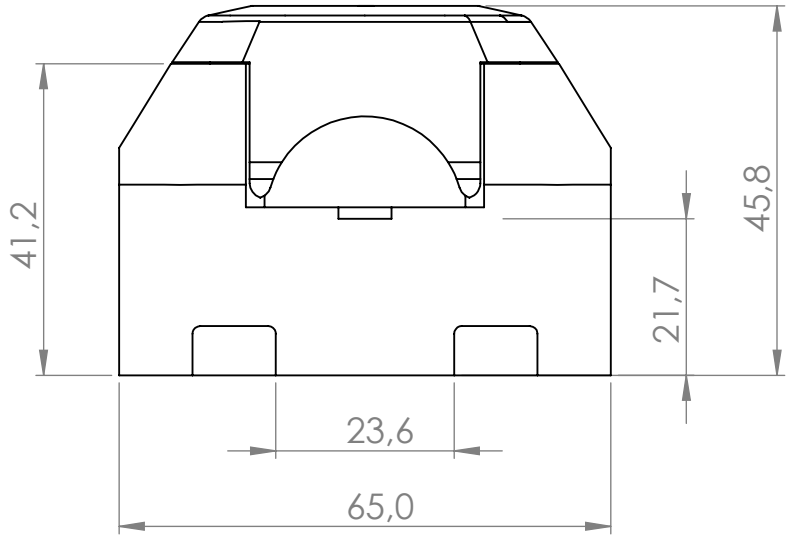

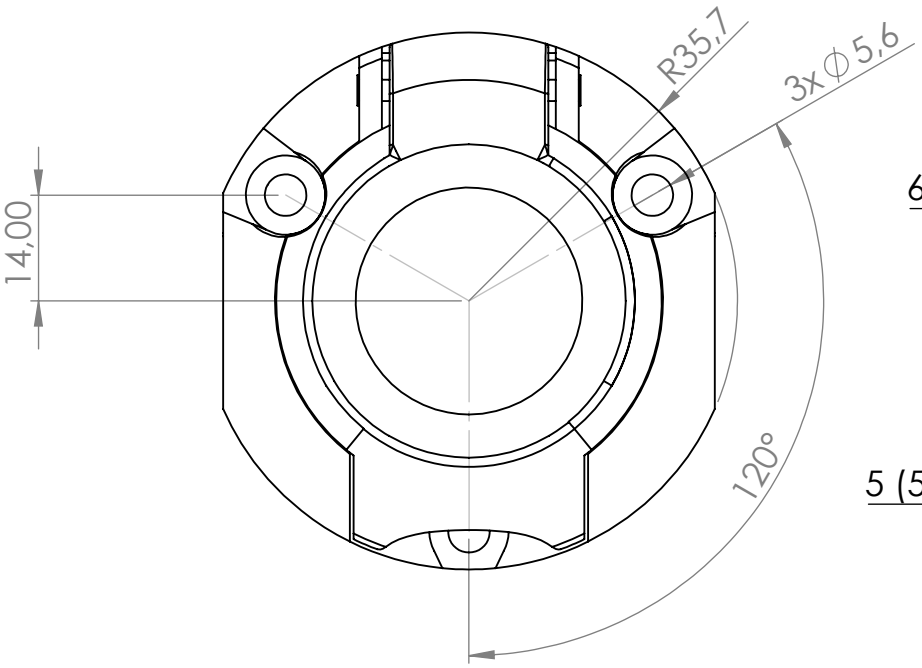

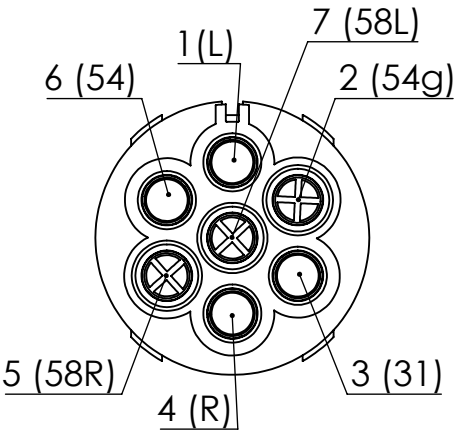

Konstr Av/Design By	Ritad Av/Drawn By	Skapad Datum/Created Date	Godkänd Av/Approved By	Tolerans/Tolerance	Skala/Scale
	S.F.	2020-12-07	H.S.	SS-ISO 2768-1 m	1:1

Status

Benämning/Description

Dose 7-pol 12v Al

Socket 7 pin 12v Al

Rit-Art Nr/Draw-Art No	Rev	Blad/Sheet
	0	1 (1)