Rating	Max. 240W 12/24VDC	Mounting Hole	Circuit Diagram
Contact Resistance	50m ohm Max.	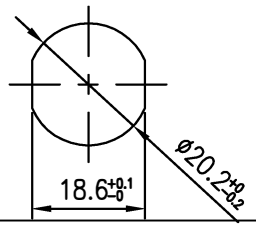	OFF 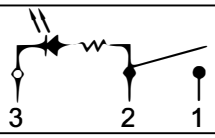
Insulation Resistance	DC 500V 100M ohm Min.		
Dielectric Strength	AC 1500V 1 minute		
Operation Temperature	-25°C~85°C		ON 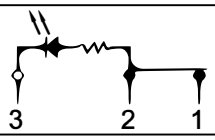
Switch Function	3P SPST ON-OFF (LED dependent)		

∗ Material
Frame: Nylon#66+33%GF, Black
Actuator: Nylon#66, Black
Lens: PC, Green
LED: Green
Printed: None

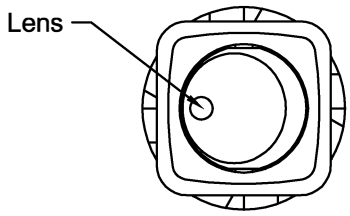

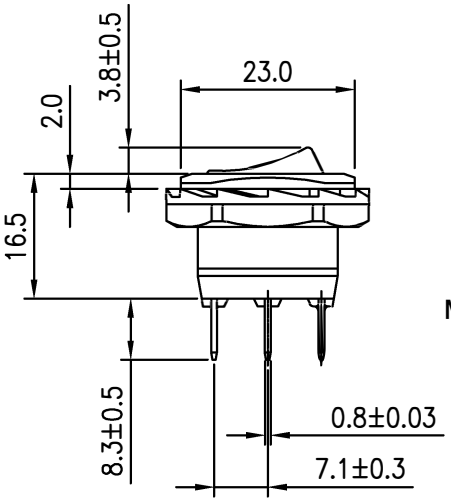

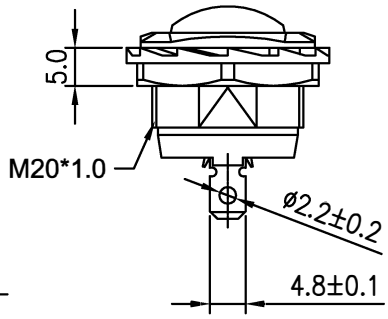

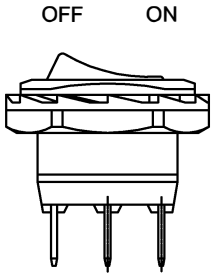

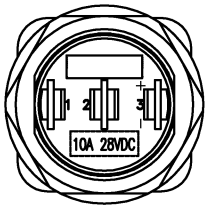

Tolerances ±0.3 Unless Otherwise Specified

							△
							△
Date	Name	Description					NO
Drawn	Checked	Approved			Model Name		
					Model No.		Rev.
				mm			0