REV.	REVISION HISTORY	NAME	DATE
0	FIRST ISSUE	A.VISIGALLI	06.04.11
1	MAXIMUM CONFIGURATION RACCOMENDED NOTE ADDED	P.BALORDI	28.10.11
2	SCALE AND NOTE UPDATED	D.BONINO	22.10.14
3	MAXIMUM CONFIGURATION TESTED CORRECTED	D.BONINO	11.02.15

CABLE ENTRY VIEW
(CAVITY NUMBERING)

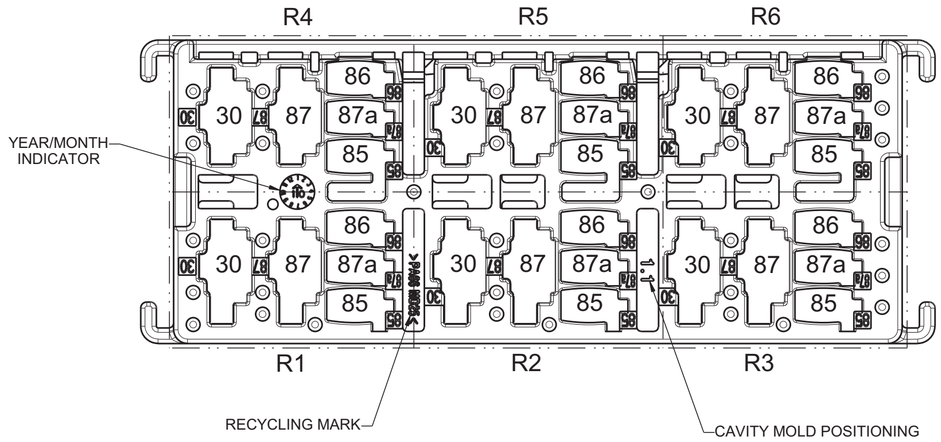

OPERATING FEATURES		
FEATURES	UNIT	VALUE
V max	V	32
T. min - T. max	°C	-40 / +120
Flammability	UL 94	HB
* 480 PIN RELAYS LENGTH ADMITTED	mm	Min. 10 - Max. 11.6
* 630 PIN RELAYS LENGTH ADMITTED	mm	Min. 10 - Max. 11.6

ADDITION NOTE:
- UNSUITABLE FOR TRACKED
* EACH APPLICATION WITH DIFFERENT LENGHT HAVE TO BE VERIFIED AND AUDITED

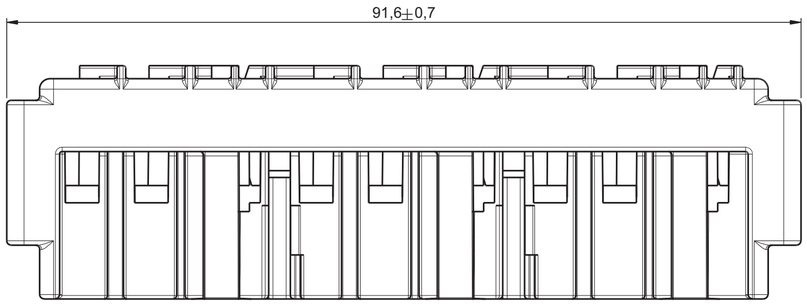

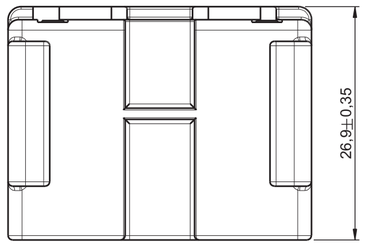

MAXIMUM CONFIGURATION TESTED

FULL POPULATED MODULE (3 MICRORELAYS 30A + 3 MICRORELAYS 20A)

CURRENT LOAD ON EACH OF THREE MICRORELAYS: 24A
CURRENT LOAD ON EACH OF THREE MICRORELAYS: 16A

TERMINALS AND CABLES TESTED:
F480E with cable sec. 0.35÷05 mm² for MicroRelays coils feeding
F630E with cable sec. 2.5 mm² for three MicroRelays
F630E with cable sec. 4 mm² for three MicroRelays

AMBIENT TEST TEMPERATURE: 23°C ± 5°C

EACH DIFFERENT CONFIGURATION HAVE TO BE VERIFIED BY MTA

PERSPECTIVE VIEW
SCALE 1:1

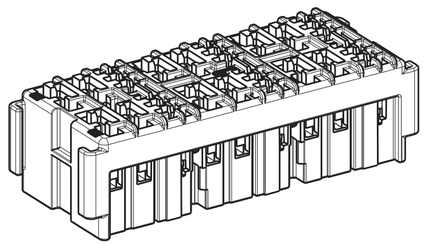

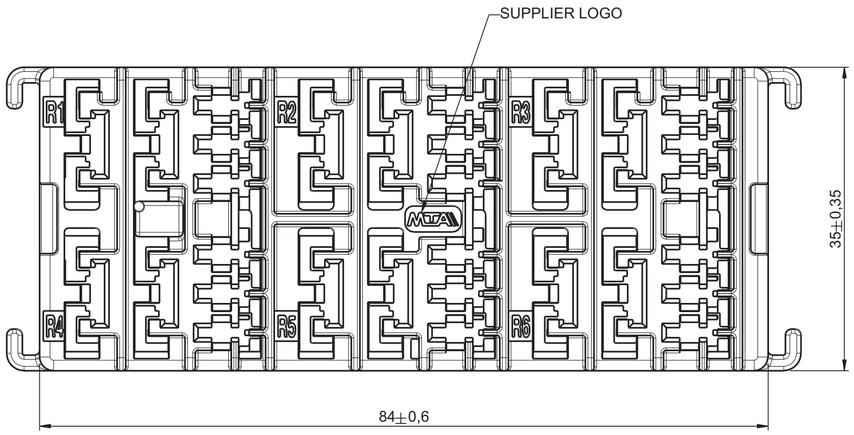

UNCONTROLLED COPY
in case of drawing updating/revision
NO AUTOMATIC
resubmission will follow

ASSOCIATED TABLE REFERENCE		
MTA P/N	DENOMINATION	CAVITY
1108400/xx; 1108401/xx; 1108402/xx	TERMINAL SERIE F480	85; 86; 87a
1708500/xx; 1708501/xx ;1708502/xx; 1708503/xx	TERMINAL SERIE F630E	30; 87
0301486/xx	SECONDARY LOCK	-

MTA P/N	0301484			Denom.	MODULE MICRORELAY 6WAY
Draw No.	B0-100.N25A			Used for	UNIT MODULE
Draw for	CLIENT			Material	PA66-MD25
	Date	Name		Coating	-
Draft.	06.04.11	A.VISIGALLI		Colour	GRAY
Chk	-	-		Note	
Verif.	23.02.15	M.PASQUANDREA			
PQApp	23.02.15	M.ROSSI			
App.	23.02.15	M.PASQUANDREA			

Scale	Weight(g)	Lin.Tol.±	Ang.Tol.±
2:1	48	0.5	2°
A2		Dimensions in (mm)	Sheet 1/1

CAD Software PTC Creo

REV. 3

All proprietary rights reserved by MTA S.p.A. - This drawing shall not be reproduced, or in any way utilized, for the manufacture of the component or unit herein illustrated and must not be released to other parties, without written consent.
Any infringiment will be legally pursued.