REV.	REVISION HISTORY	NAME	DATE
5	OPERATING FEATURES UPDATED	A.CAPELLI	20/10/04
6	FUSEHOLDER MATERIAL MODIFIED	S.BEDUSCHI	04/10/18

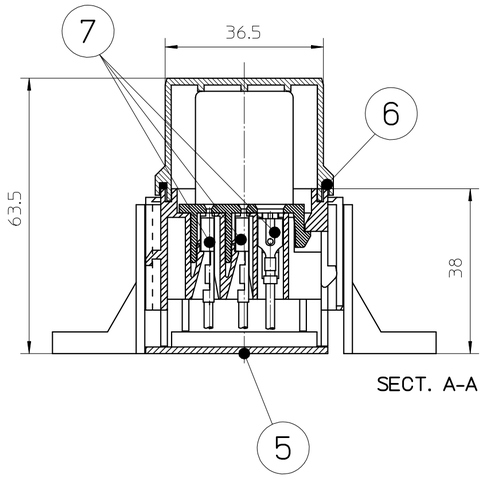

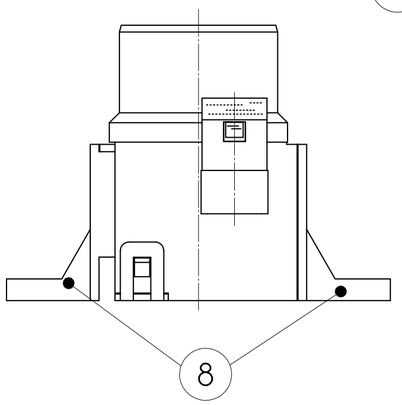

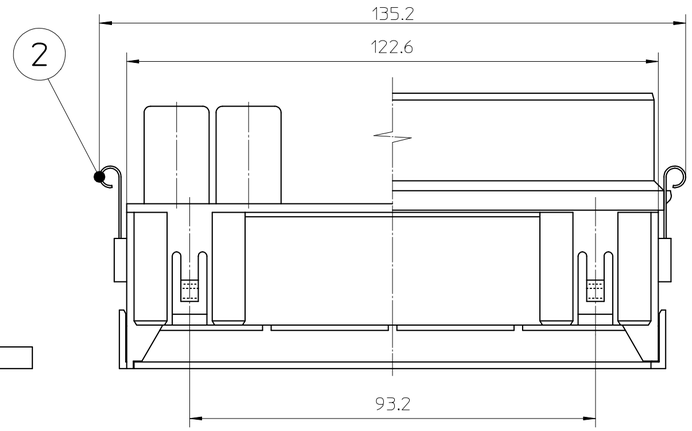

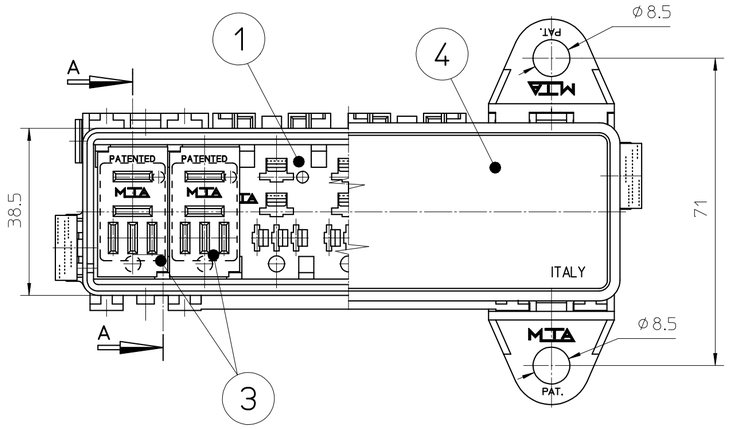

UNCONTROLLED COPY
in case of drawing updating/revision
NO AUTOMATIC
resubmission will follow

Pos.	Q.ty	DENOMINATION	MATERIAL	COLOR
8	4	FIXING BRACKET	PA66 - V2	BLACK
7	40	TERMINAL	CuZn	-
6	1	GASKET	NBR 50	BLACK
5	1	BOTTOM COVER	PA66 - V2	BLACK
4	1	UPPER COVER	PC - V2	TRANSPARENT
3	7	SECONDARY LOCK	PA66 - V2	YELLOW
2	2	DOCKING CLIP	Stainless Steel	-
1	1	FUSEHOLDERS	PA66-GF30 - HB	BLACK

OPERATING FEATURES		
FEATURE	UNIT	VALUE
T.min - T.max	°C	-40 / +120
V. max	V	32
IP	IEC 529	32
* I Continuous	A	150 (14W)

*APPLICATION WITH CURRENT HIGHER THAN THE INDICATED ONE HAVE TO BE VERIFIED AND AUDITED ONE BY ONE

	Date	Name
Draft.	05/03/1992	G.CINQUETTI
Chk	-	-
Verif.	05/10/18	F.ZIMMITTI
PQApp	05/10/18	M.ROSSI
App.	05/10/18	G.SPATARO

MTA P/N	0100705/3x
Draw No.	B0-002.007A
Draw for	CUSTOMER
Denom.	RELAY BOX MICRO 7 WAY
Used for	
Material	SEE TABLE
Coating	SEE TABLE
Colour	SEE TABLE
Note	

Scale	Weight(g)	Lin.Tol.±	Ang.Tol.±
1 : 1	192	0.5	2
A2		Dimensions in (mm)	Sheet 1/1

CAD Software PTC Drafting

REV 6

All proprietary rights reserved by MTA S.p.A. - This drawing shall not be reproduced, or in any way utilized, for the manufacture of the component or unit herein illustrated and must not be released to other parties, without written consent. Any infringiment will be legally pursued.