REVISION HISTORY			
REV.	DESCRIPTION	NAME	DATE
8	OPERATING FEATURES UPDATED	A.CAPELLI	20.10.04
9	FUSE HOUSING UPDATED	R.DALMA	25.10.12
10	FUSE HOUSING LATERAL WALLS DECREASED AND LATERAL FIXING TOOTH OPTIMIZED	R.DALMA	26.07.13
11	DRAWING REVIEW	M.FIGONI	31.08.18
12	UPDATED TITLEBLOCK, MODIFIED FORMAT SHEET AND FUSE HOUSING MATERIAL	G.UTICA	28.09.18

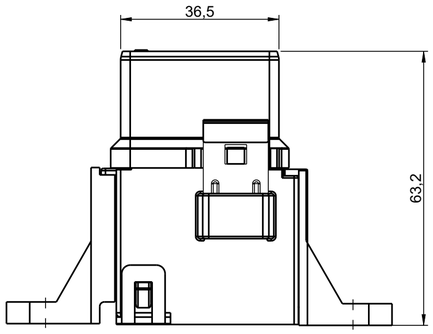

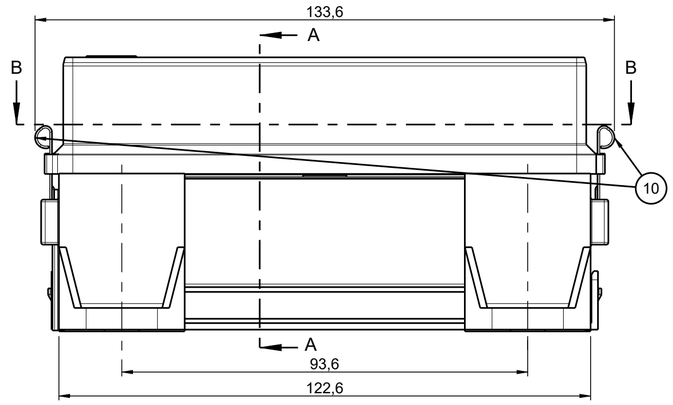

OPERATING FEATURES		
FEATURES	UNIT	VALUE
T. MIN - T. MAX	°C	-40 / +120
V MAX	V	32
IP	IEC 529	32
I (CONTINUOUS)	A	225 (14 W) *
BRACKETS EXTRACTION LOAD	N	> 40
* APPLICATION WITH CURRENT HIGHER THAN THE INDICATED ONE HAVE TO BE VERIFIED AND AUDITED ONE BY ONE		
DISCARD FALLEN PIECES		

SECTION A-A

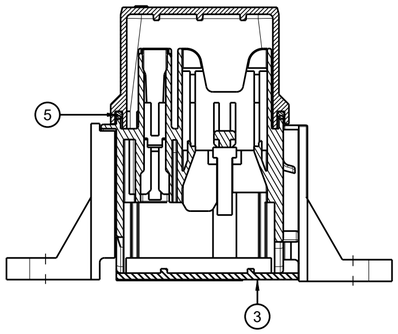

SECTION B-B

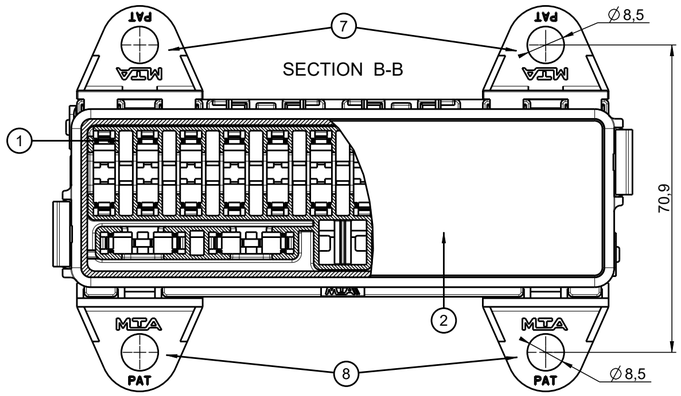

UNCONTROLLED COPY
in case of drawing updating/revision
NO AUTOMATIC
resubmission will follow

SECONDARY LOCKS SUPPLY STATUS
SCALE 1:2

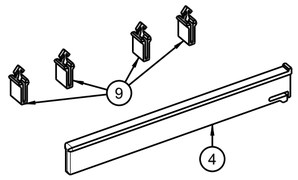

TERMINALS' SUPPLY STATUS
SCALE 1:2

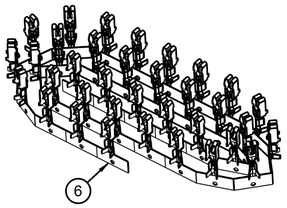

POS.	Q.TY	DENOMINATION	MATERIAL	ASSEMBLED
10	2	CLIPS	STAINLESS STEEL AISI 301	YES
9	4	SECONDARY LOCK	PA66 V2 - YELLOW COLOUR	NO
8	2	FEMALE FIXING BRACKET	PA66 V2 - BLACK COLOUR	YES
7	2	MALE FIXING BRACKET	PA66 V2 - BLACK COLOUR	YES
6	35	TERMINALS (IN STRIP)	CuSn TIN PLATED	NO
5	1	GASKET	NBR 70 SHORE A - BLACK COLOUR	YES
4	1	SECONDARY LOCK	PA66 HB - YELLOW COLOUR	NO
3	1	BOTTOM COVER	PA66 V2 - BLACK COLOUR	YES
2	1	UPPER COVER	PC V2 - TRANSPARENT	YES
1	1	FUSE HOUSING	PA66-GF30 HB - BLACK COLOUR	YES

	Date	Name
Draft.	29.05.91	M.CORBANI
Chk	-	-
Verif.	28.09.18	F.ZIMMITTI
PQApp	01.10.18	M.ROSSI
App.	01.10.18	G.SPATARO

MTA P/N	0100655/4x	Denom.	FUSE BOX UNIVAL MY 16WAY
Draw No.	B0-002.005A	Used for	-
Draw for	CUSTOMER	Material	SEE TABLE
Scale: 1:1	Weight(g): -	Lin.Tol.±: 1	Ang.Tol.±: 2°
Coating	-		
Colour	SEE TABLE		
A2	Dimensions in (mm)	Sheet 1/1	
CAD Software PTC Creo		Note	

REV. 12

All proprietary rights reserved by MTA S.p.A. - This drawing shall not be reproduced, or in any way utilized, for the manufacture of the component or unit herein illustrated and must not be released to other parties, without written consent.
Any infringiment will be legally pursued.